10” x 80’
MECHANICAL DRIVE
SWING AWAY AUGER

PARTS LIST

SERIAL NOS. 84000 - 87999

10”X 80’ TUBE ASSEMBLY - 10” MDSA AUGER
SERIAL NOS. 84000 - 87999

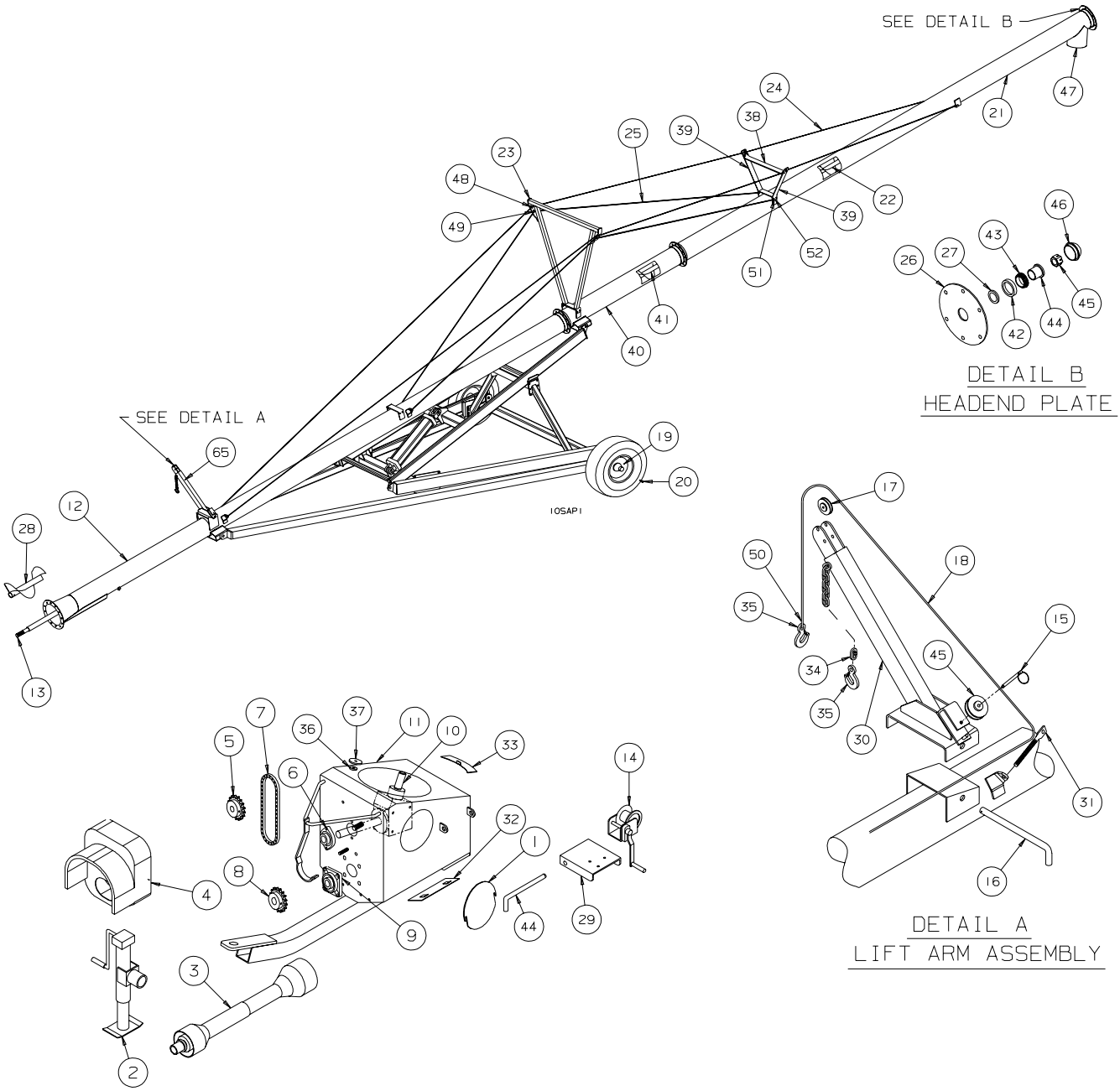

#	PART #	DESCRIPTION
1	B198362	Boot Access Cover
2	B030500	Side Wind Jack
3	B0030491	PTO Shaft - Constant Velocity
4	B027504	Boot Guard, MDSA Plastic
5	B009010	60-17 Sprocket - 1 1/4" Bore
6	B017200	Bearing - 1 1/4" - 2 Bolt
7	B009014	R60 Chain x 40 Pitch
8	B009028	60-17 Sprocket - 1 3/8" Bore
9	B017160	Bearing - 1 3/8" - 4 Bolt
10	B003015	1:1 Gearbox - 112° - 21 Spline
11	B198404M	10" Intake Boot - CV
12	C107075	80' x 10" Bottom Tube - MD
13	B198308CV	70' x 10" Bottom Flight - MD
14	B030100	1000 lb. Brake Winch
15	B002105	Pin-3/8 x 2.5 -Quick Release
16	B198351	Saddle Retainer Pin
17	B018080	3" OD x 1/4" Cable Sheave (2 Req'd)
18	B194186	1/4" dia. Aircraft Cable x 29' Long
19	B011018	15" Rim - 6 Bolt
20	B011504	Wheel Bolt
21	C107049	Upper Tube Weld - 80'
22	C107068	Upper Flight Weld - 80'
23	C107050	Large Truss Tower
24	B0083089	1/2"x 71'-6" Aircraft Cable - 80'
25	B0083081	3/8"x 43' Aircraft Cable - 80'
26	C107067	10" Trust End Plate
27	B011649	10" Headend Seal
28	B194008M	11" Booster Flight
29	B198353	Winch Bracket
30	C104029	Lift Arm - 44" Tube (Dual Flight Hopper)
31	B0020246	5/8"x 9 3/8" Eye bolt (Truss Cable)
32	B198363	Boot Clean-Out Door
33	C100872	Swing Stop Weld
34	B0210362	5/16" Rapid Chain Link (Dual Flight Hopper)
35	B002125	3/4 Ton Chain Hook (Dual Flight Hopper)
36	C100889	Small Swing Tube Spacer
37	B198361	Large Swing Tube Retainer
38	C107052	Small Truss Tower Top
39	C107051	Small Truss Tower Side
40	C107041	Centre Tube - 80'
41	C107038	Centre Flight - 80'
42	B011652	Inner Cup - 6 Bolt Hub - LM29710
43	B011651	Inner Cone - 6 Bolt Hub - LM29749
44	B011710	Bushing- Taper Bearing
45	B011629	Spindle Nut - 1 1/4"

#	PART #	DESCRIPTION
46	B011502	Dust Cap - DC15
47	C107069	10" Angled Downspout
48	B008085	1/2" Cable Clamp
49	B008080	3/8" Cable Clamp
50	B008070	1/4" Cable Clamp
51	B002311	5/8" ID x 3/4" Buttite Spacer
52	B0020715	2"OD x 17/32"ID Washer

10”X 80’ UNDERCARRAIGE ASSEMBLY - 10” MDSA AUGER
SERIAL NOS. 84000 - 87999

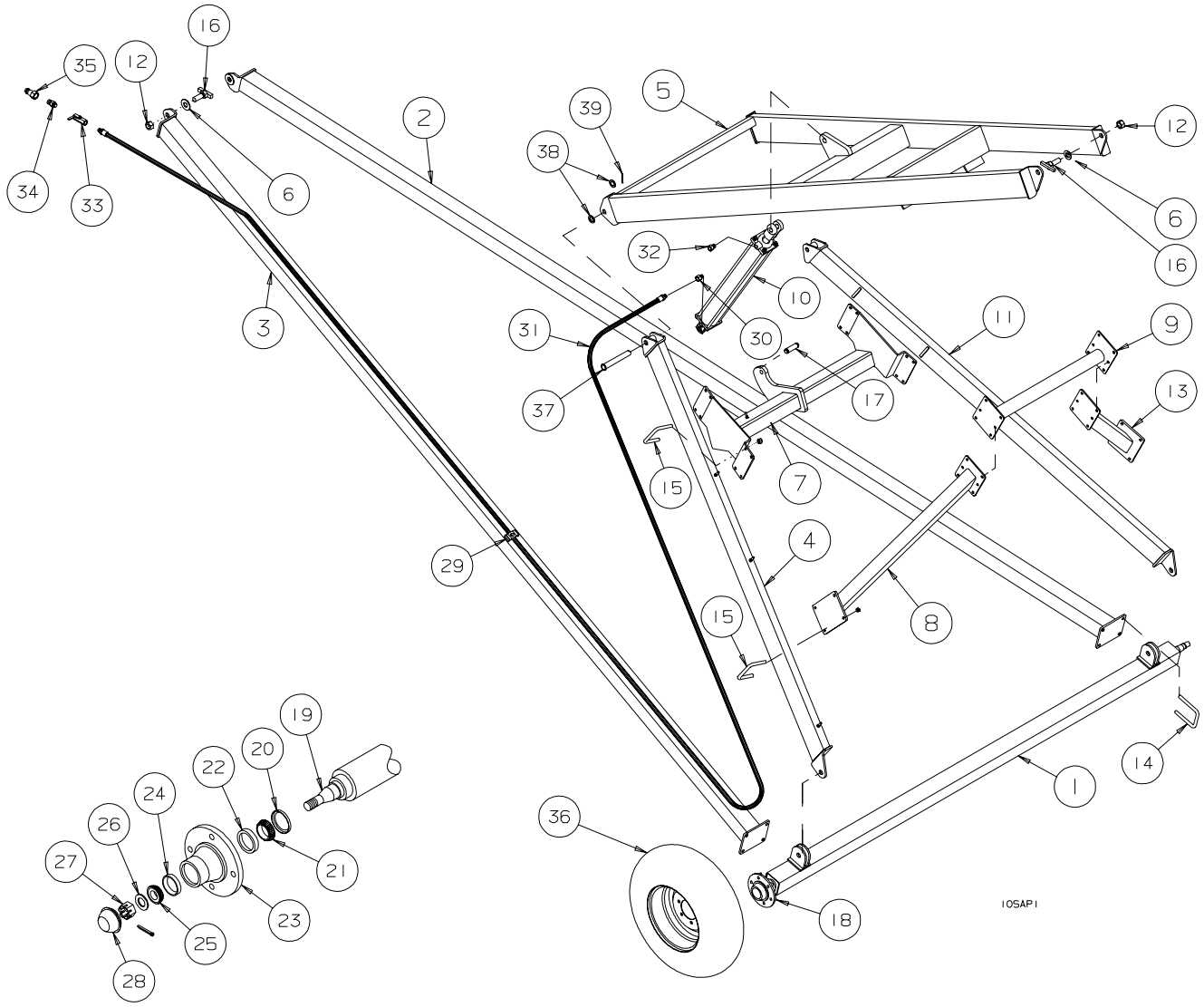

REF #	PART NO.	DESCRIPTION
1	C201215	Scissor Axle Weld
2	C107076L	Axle Arm - Left
3	C107076R	Axle Arm - Right
4	C108056R	Lift Arm - Right
5	C108055	Ladder
6	B001159	1” Flat Washer
7	C108057	Lift Cross
8	C108058R	Transport Uprite - Right
9	C108059	Transport Rest
10	B0191675	Hydra. Cylinder- 4”x 30”
NS	B019025	Seal Kit - 4” x 30” Cylinder
11	C108056L	Lift Arm - Left
12	B001075	1” Lock Nut
13	C108058L	Transport Uprite - Left
14	B0020188	5/8”x 4” Sq. U-bolt x 5 1/2” Lg
15	B0020214	5/8”x 8” Sq. U-bolt x 5 3/8” Lg
16	C200666	Suspension Bolt
17	B019178	Hydraulic Cylinder Pin
18	B011003	6 Bolt Hub Complete c/w Bearings
19	B011010	Spindle Only
20	B011650	Seal - 6 Bolt Hub
21	B011651	Inner Cone - 6 Bolt Hub - LM29749
22	B011652	Inner Cup - 6 Bolt Hub - LM29710
23	B011605	Hub Only c/w Cups - 6 Bolt Hub
24	B011668	Outer Cup - 6 Bolt Hub - LM67010
25	B011603	Outer Cone - 6 Bolt Hub - LM67048
26	B001158	1" SAE Flatwasher
27	B011681	1"- 14 TPI UNF Castle Nut
28	B011503	Dust Cap - 6 Bolt Hub
29	B021605	Plastic Hose Holder
30	B019416	Restrictor- #6 MORB x #6 MJIC - 1/16” Dia
31	B0192937	3/8” Hydra. Hose x 62’- 3/8” MPT x #6 FJIC
32	B0193051	Breather - #6 MORB, 10 micron
33	B019300	Ball Valve - 3/8” FPT
34	B019516	Reducer Nipple - 1/2” MPT x 3/8” MPT
35	B019200	Male Pioneer Tip - 1/2” FPT
36	B011221	P225-70R15 Tire & Rim
37	C302931	Hinge Pin - 1 1/2” dia x 9” long
38	B0011612	1 1/2” SAE Flatwasher
39	B0020605	5/16” x 3” Roll Pin

DUAL FLIGHT SWING TUBE ASSEMBLY - 10” MDSA AUGER
SERIAL NOS. 84000 - 87999

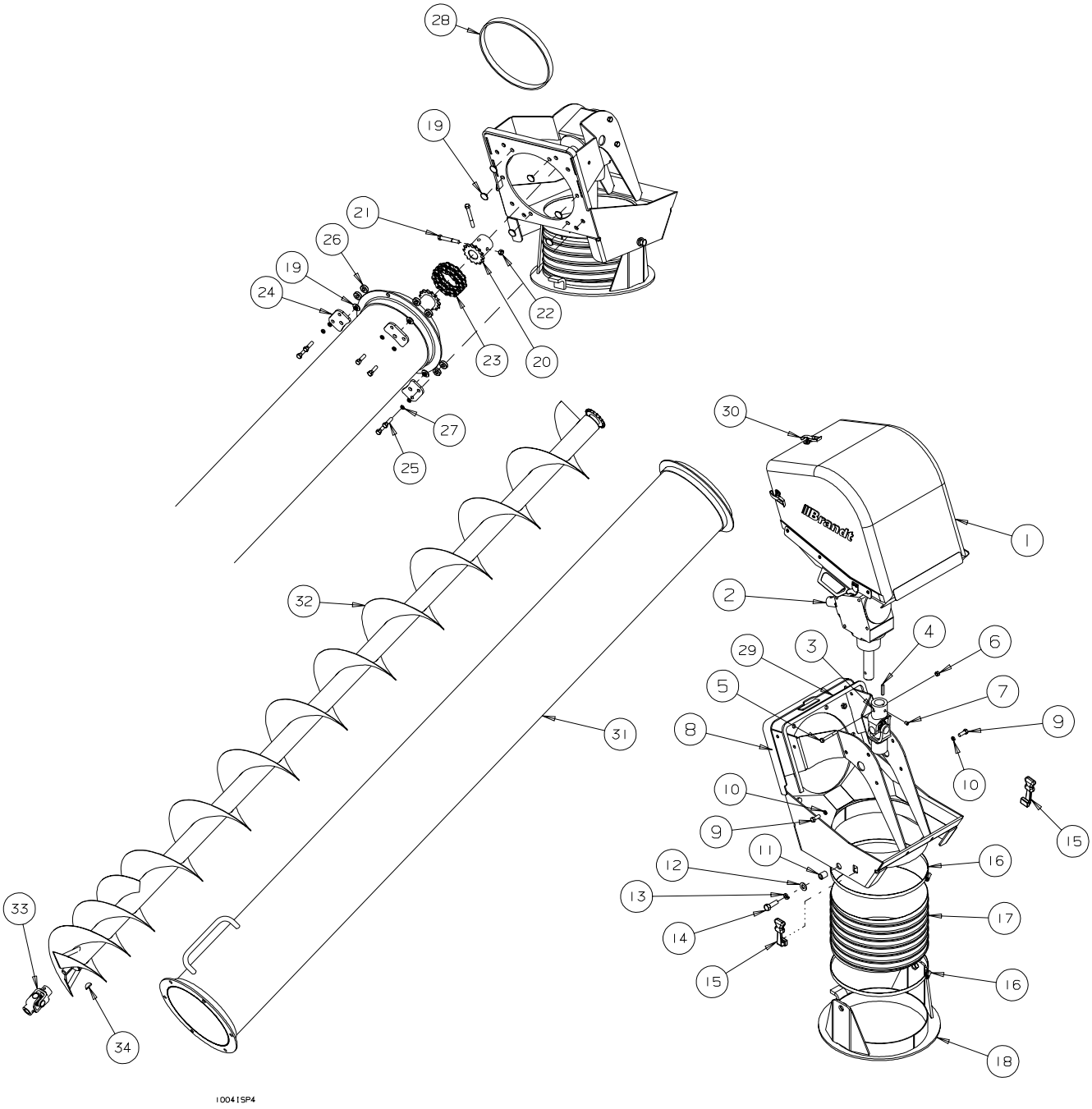

REF #	PART NO.	DESCRIPTION
1	C106876	Plastic Spout Cover Assembly
NS	B0275036	Plastic Spout Cover Only
2	B003014	Upper Gear Box - 10”
3	B032135	U-joint - 1 1/4” Dia x 21 Spline
4	B689169	1/4” Key x 1 1/2” Long
5	B001015	5/16”x 2 1/2” Bolt
6	B0011275	5/16” Stover Lock Nut
7	B002041	3/8” x 3/8” Set Screw
8	C105867	10” Spout Weldment
9	B001024	3/8” x 1” Bolt
10	B001165	3/8” Lock Washer
11	C100869	Swivel Bushing
12	B001152	1/2” SAE Flatwasher
13	B001167	1/2” Lock Washer
14	B001040	1/2” x 1 1/4” Bolt
15	B0219992	Rubber Latch
16	B024213	13” Hose Clamp
17	C100879	Downspout Hose - 12” Dia x 12” Long
18	C100868	Lower Swivel Weldment
19	B027500	Plastic Wear Bushing
20	B0090024	50- 18 Sprocket x 1 1/4” Bore
21	B0010385	3/8” x 2 3/4” Bolt
22	B001132	3/8” Lock Nut
23	B0096017	R50-2 x 18 Pitch Roller Chain
24	C100870	Retainer Plate
25	B001025	3/8” x 1 1/4” Bolt
26	B027499	Plastic Spacer Bushing
27	B001165	3/8” Lockwasher
28	C103953	10” Spout Seal Foam
29	SW1015	Spout Cover Seal
30	B021110	Small Latch Assembly
31	C104015	10” Dual Flight Swing Tube
32	C104011	10” Dual Swing Tube Flight
33	B0321125	1” x 1” U-Joint - 6R
34	B009700	1.25” x .25” Woodruff Key - #810

DUAL FLIGHT SWING HOPPER ASSEMBLY - 10” MDSA AUGER
SERIAL NOS. 84000 - 87999

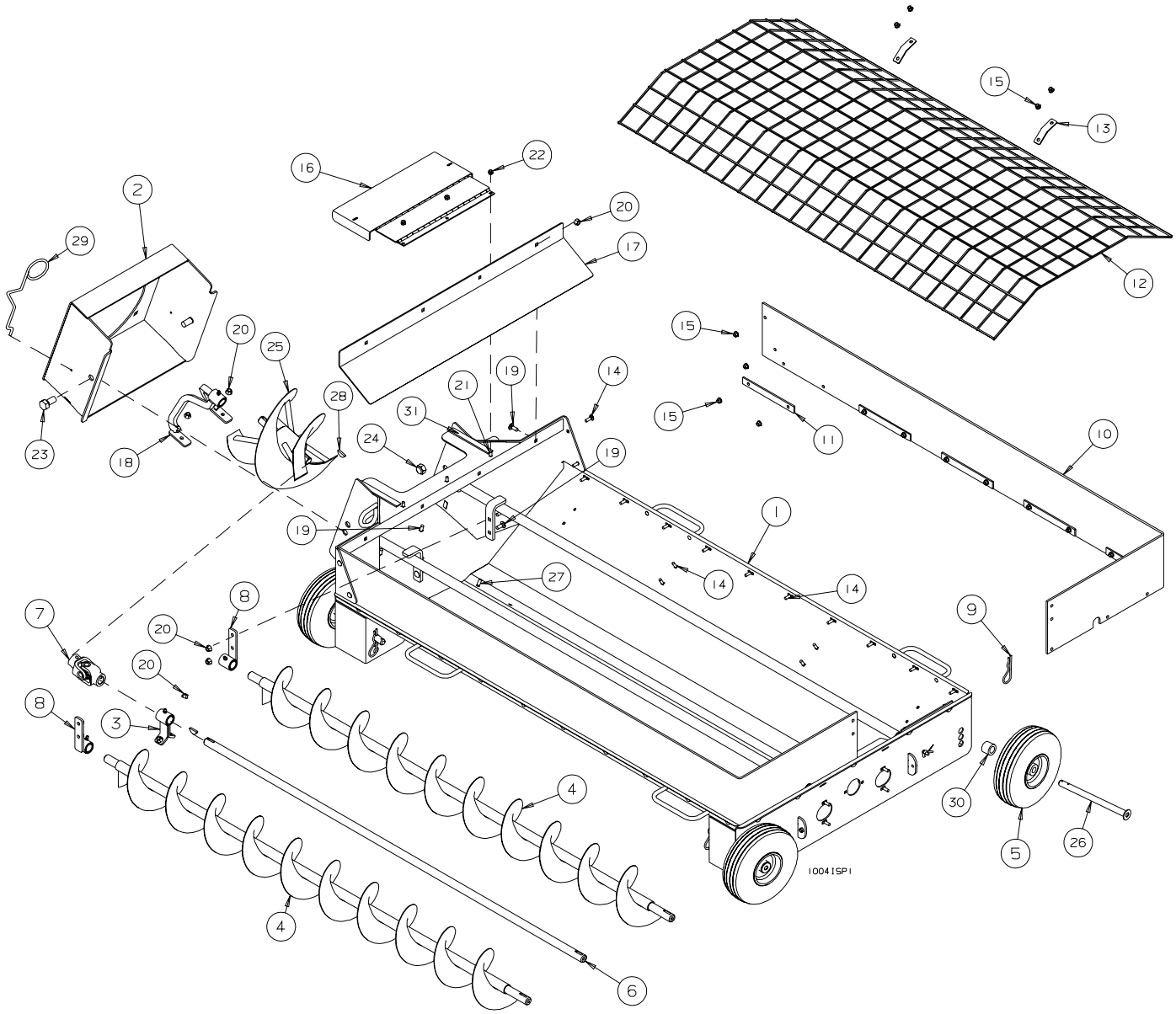

REF #	PART NO.	DESCRIPTION
1	C104001	Swing Hopper Weldment
2	C104000	10” Hopper Transition
3	C104004	Hopper Driveshaft Bearing
4	C104009	Right Hopper Flight
5	B011041	10” Dia Hopper Tire & Rim - 3/4” Bore
6	C104006	10” Hopper Driveshaft - 72 7/16” lg.
7	B0321125	1” x 1” U-Joint - 6R
8	C104005	Flight Hanger
9	B002091	.177” x 3 3/4” Hair Pin Clip
10	B0210415	Rubber Hopper Extension
11	B198071	Aluminum Hold Down Strap
12	C104010	Hopper Safety Grate
13	B198358	Hopper Mesh Retainer
14	B0010811	5/16” x 1” Carriage Bolt
15	B0011276	5/16” Flange Lock Nut
16	C104013	Transition Cover
17	C104012	Baffle Plate
18	C104007	10” Transition Flight Mount
19	B001082	3/8” x 1” Carriager Bolt
20	B001405	3/8” Serrated Flange Nut
21	B001081	5/16” x 3/4” Carriage Bolt
22	B001127	5/16” Lock Nut
23	B001099	3/4” x 1 1/2” Bolt
24	B001143	3/4” Lock Nut
25	C104016	10” Transition Flight
26	B198856	Hopper Wheel Pin
27	B001433	3/8” x 1” Serrated Flange Bolt
28	B009700	1.25” x .25” Woodruff Key - #810
29	B021086	Cover Hold Down Spring
30	B198855	Hopper Wheel Spacer
31	C104022	Hopper Foam Seal

DUAL FLIGHT SWING HOPPER DRIVE ASSEMBLY - 10” MDSA AUGER
SERIAL NOS. 84000 - 87999

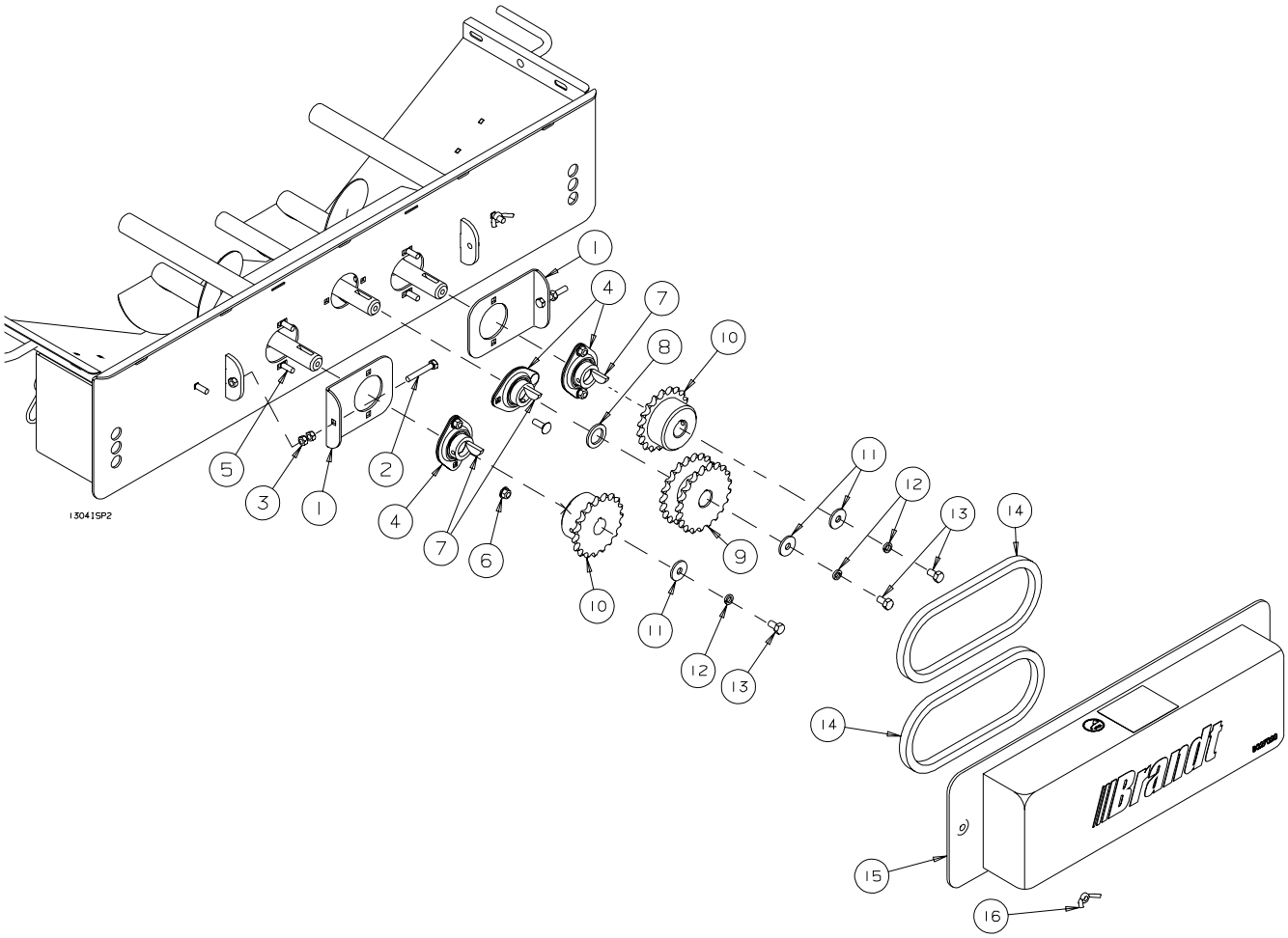

REF #	PART NO.	DESCRIPTION
1	C104017	Chain Tension Plate
2	B0010213	5/16” x 2” Full Thread Bolt
3	B001126	5/16” Nut
4	B017111	1” - 2 Bolt Flangette Bearing
5	B0010811	5/16” x 1” Carriage Bolt
6	B0011276	5/16” Locking Flange Nut
7	B009700	1.25” x .25” Woodruff Key - #810
8	B002073	1 1/2” OD x 1” ID x 10 Ga Machinery Bushing
9	B0090022	50-15 Double Sprocket - 1” Bore
10	B0090019	50-21 Sprocket - 1” Bore
11	B0020718	1 1/4” OD x 3/8” ID Washer
12	B001165	3/8” Lockwasher
13	B0010225	3/8” x 5/8” Bolt
14	B0090052	R50 x 35 Pitch Roller Chain
15	C104021	Hopper Chain Guard
16	B001129	5/16” Wing Nut

UPPER GEARBOX - 10” MDSA AUGER
SERIAL NOS. 84000 - 87999

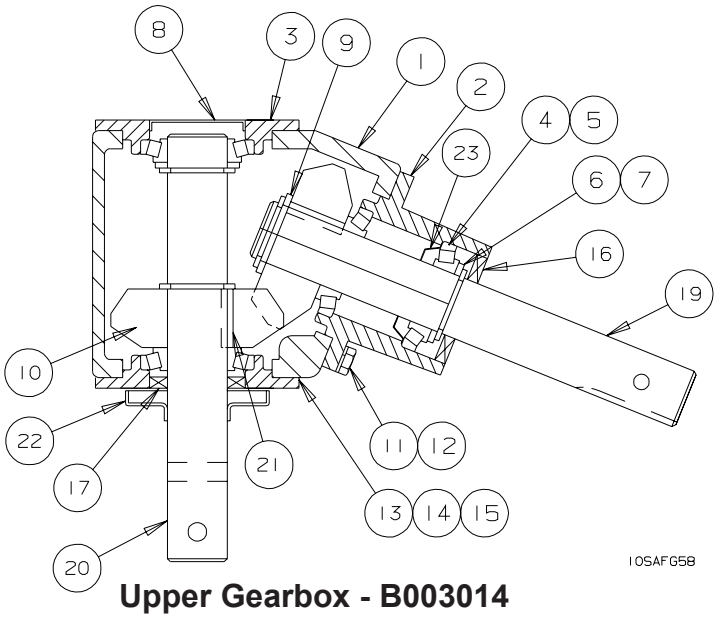

Upper Gearbox - B003014

REF #	PART NO.	DESCRIPTION
1	B191221	Gearbox Case
2	B191222	Bearing Housing-Sealed
3	B191223	Bearing Housing
4	B011603	Bearing Cone
5	B011602	Bearing Cup
6	B882237	Spacer
7	B191225	Snap Ring
8	B882231	Bearing Cap Plug
9	B191237	Shim - .007" x 1.25" ID
10	B191232	Gear 68 degree cut
11	B001009	5/16" x 3/4 Bolt
12	B001164	5/16" Lockwasher
13	B781357B	Shim - .005"
14	B781357N	Shim - .0075"
15	B781357Y	Shim - .010"
16	B882230	Seal
17	B882228	Seal
18	B781364	Pipe Plug- 1/4" NPT
19	B191226	Pinion Shaft
20	B191227	Cross Shaft
21	B781356	Key
22	B191235	Seal Shield
23	B191233	Grease Washer

LOWER GEARBOX - 10” MDSA AUGER
SERIAL NOS. 84000 - 87999

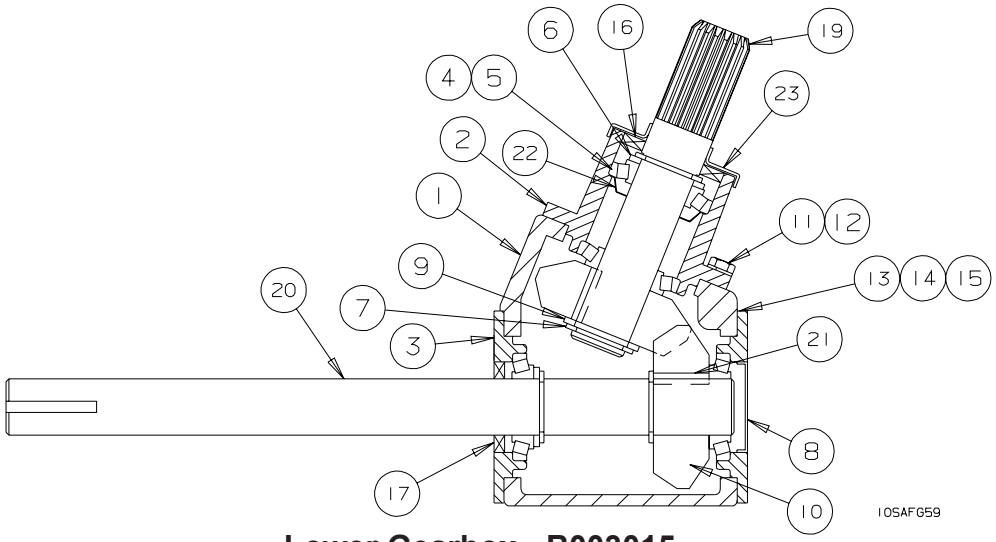

Lower Gearbox - B003015

REF #	PART NO.	DESCRIPTION
1	B191221	Gearbox Case
2	B191222	Bearing Housing-Sealed
3	B191223	Bearing Housing
4	B011603	Bearing Cone
5	B011602	Bearing Cup
6	B882237	Spacer
7	B191225	Snap Ring
8	B882231	Bearing Cap Plug
9	B191237	Shim - .007" x 1.25" ID
10	B191232	Gear 68 degree cut
11	B001009	5/16" x 3/4 Bolt
12	B001164	5/16" Lockwasher
13	B781357B	Shim - .005"
14	B781357N	Shim - .0075"
15	B781357Y	Shim - .010"
16	B191228	Seal
17	B882228	Seal
18	B781364	Pipe Plug- 1/4" NPT
19	B191230	Pinion Shaft
20	B191231	Cross Shaft
21	B781356	Key
22	B191233	Grease Washer
23	B191234	Seal Shield

WEASLER SERIES 35R - 50 CV
B0030491 - 10” HD MECHANICAL DRIVE SWING AWAY AUGERS

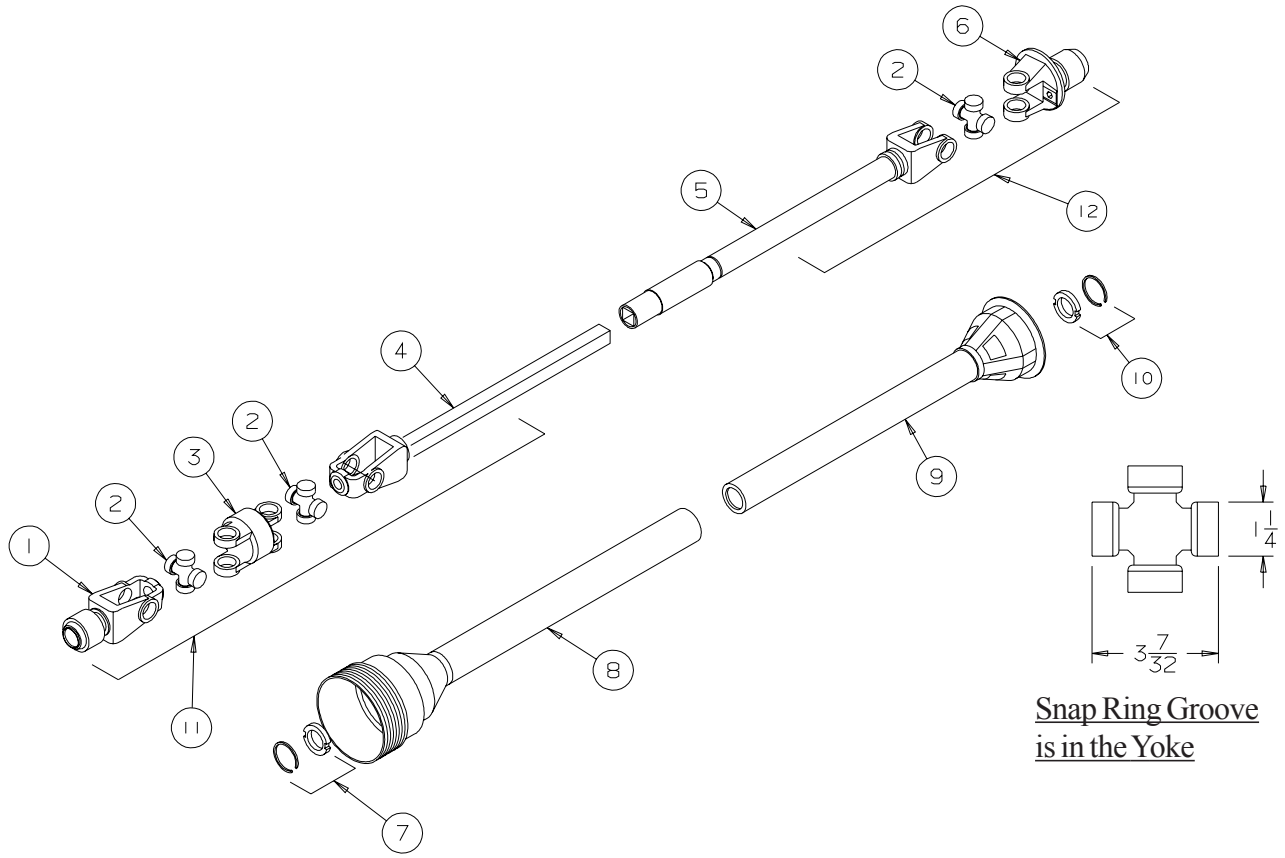

REF #	PART NO.	DESCRIPTION	QTY.
1	B003740	Implement Yoke - 21 Spline	1
2	B003715	Cross & Bearing Kit	3
3	B003741	Centre Housing	1
4	B003872	Output Yoke & Shaft - CV End	1
5	B003873	Input Yoke & Tube - Implement End	1
6	B003744	Shear Yoke Assembly - 6 Spline	2
7	B003738	Shield Bearing - CV End	1
8	B003876	Outer Shield	1
9	B003877	Inner Shield	1
10	B003745	Shield Bearing - Tractor End	1
11	B003870	Implement Half of Shaft c/w Guard - 21 Spline	1
12	B003871	Tractor Half of Shaft c/w Guard - 6 Spline	1
NS	B0010101	Shear Bolt - 5/16” x 1” Gr.8	1
NS	B003103	Shear Nut - 5/16” Stover Lock Nut	1

REVERSING KIT - 10” MDSA AUGER
SERIAL NOS. 84000 - 87999

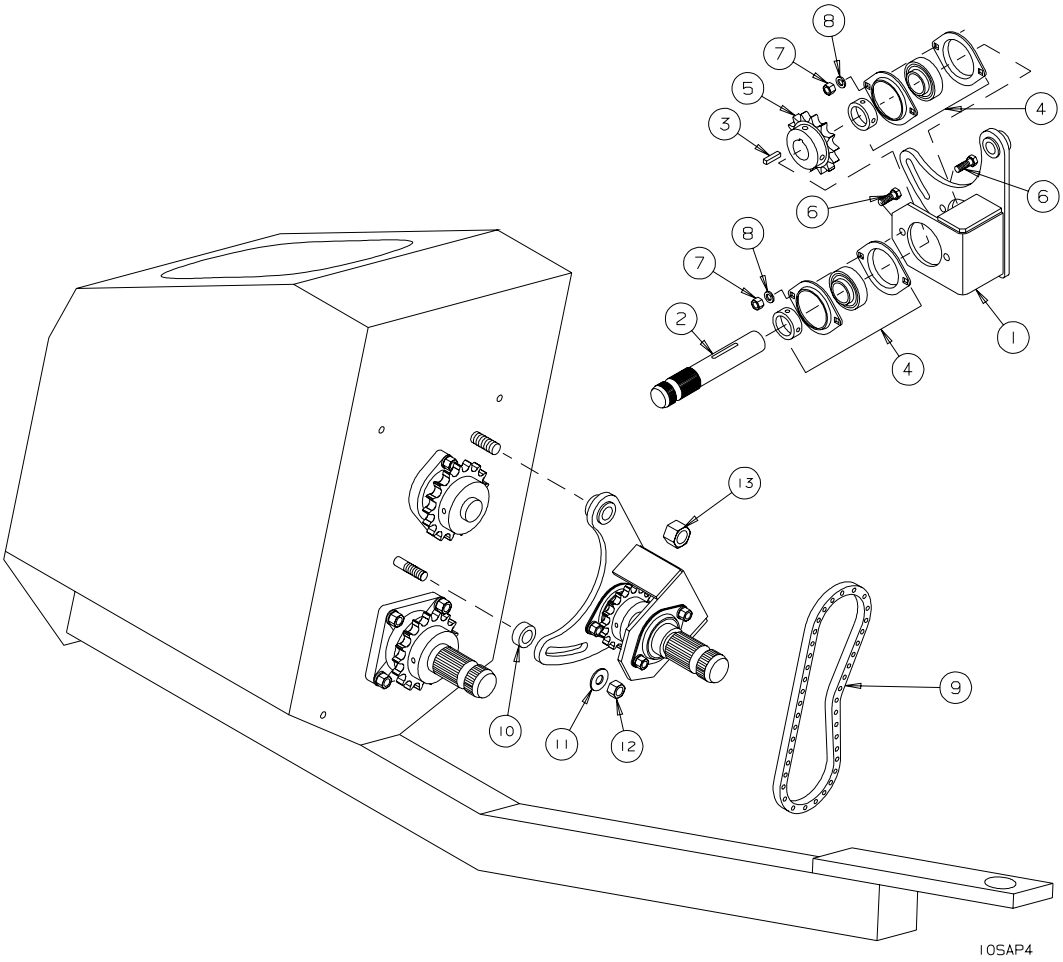

REF #	PART NO.	DESCRIPTION
1	B194200	Reverser - Main Bracket
2	B032203	Reverser - Splined Shaft
3	B185206	1/4" Key x 1 1/8" Long
4	B017120	Bearing - 1 1/4" dia - 2 Bolt Flangette
5	B009027	60-14 Sprocket - 1 1/4" Bore
6	B001024	3/8" x 1" Hex Bolt
7	B001131	3/8" Hex Nut
8	B001165	3/8" Lockwasher
9	NPN	R60 Chain x 41 Pitch
10	B194201	1/2" Spacer Bushing
11	B001151	1/2" Flatwasher
12	B001136	1/2" Locknut
13	B001144	3/4" Locknut

SIDE DRIVE KIT - 10” MDSA AUGER
SERIAL NOS. 84000 - 87999

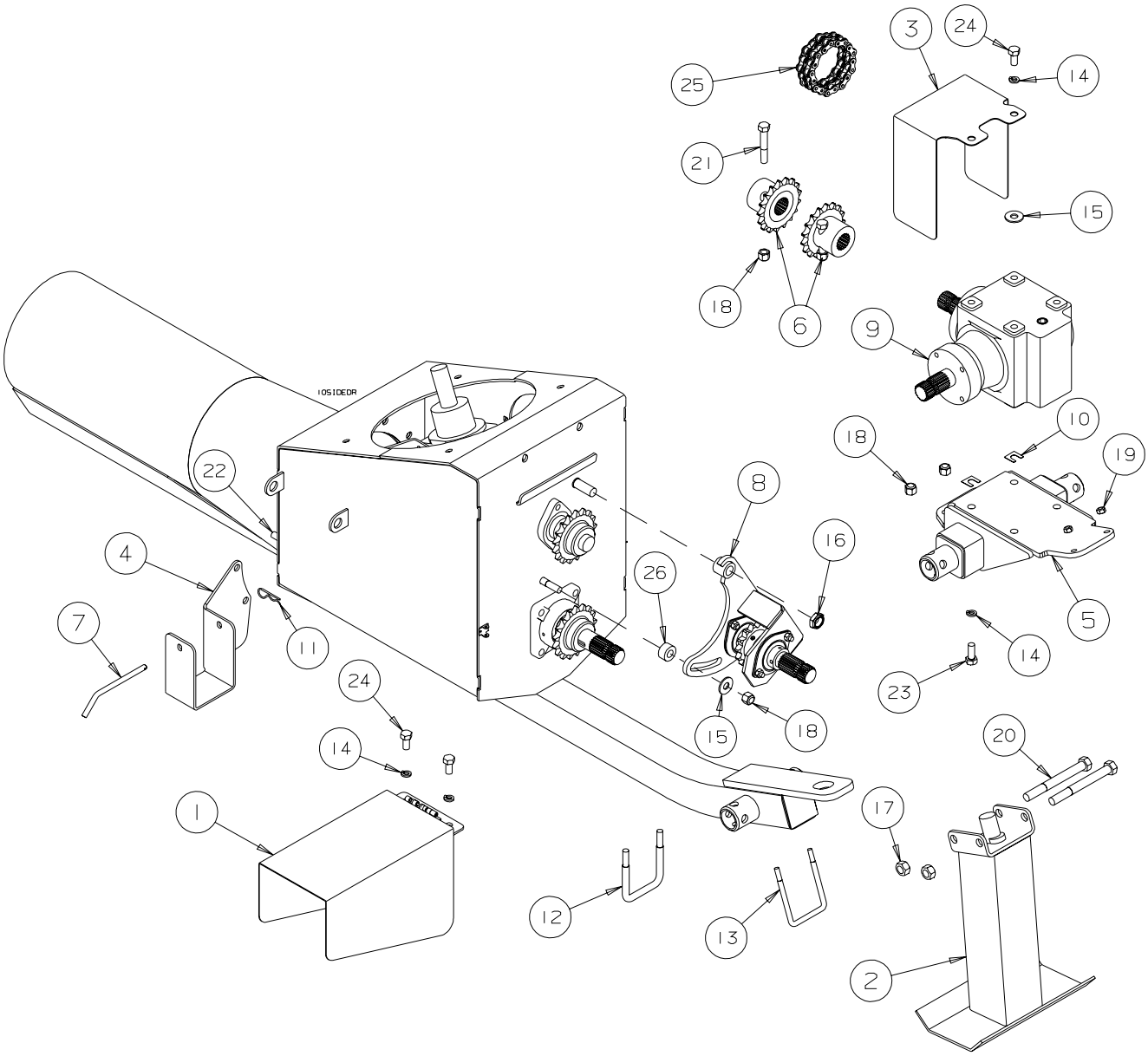

REF #	PART NO.	DESCRIPTION
1	C107074	PTO Guard
2	C107048	Hitch Stand
3	C107047	Coupler Guard
4	C107046	PTO Holder
5	C107045	Gearbox Mount
6	C107044	Coupler Sprocket - 60-17 x 1 3/8”- 21 Spline
7	B496655	PTO Storage Keeper Pin
8	B194210	10” Reverser Assembly
9	B0030281	Gearbox - 10” MDSA Side Drive
10	B002540	Body Shim - 33/64” x 1/32” thick
11	B002092	Hairpin Clip - .094” x 2 1/4”
12	B002017	1/2” x 3 1/8” U-bolt x 4 3/8” long
13	B0020131	3/8” x 3 1/8” U-bolt x 4 9/16” long
14	B001167	1/2” Lockwasher
15	B001151	1/2” Flatwasher
16	B001144	3/4” Locking Jam Nut
17	B001139	5/8” Hex Nut
18	B001136	1/2” Lock Nut
19	B0011325	3/8” Stover Lock Nut
20	B0010746	5/8” x 6” Bolt
21	B001048	1/2” x 3” Bolt
22	B001042	1/2” x 1 1/2” Bolt
23	B001040	1/2” x 1 1/4” Bolt
24	B001039	1/2” x 1” Bolt
25	B009590	60-2 Roller Chain x 17 pitch
26	B194201	Reverser Spacer Bushing
NS	B0030471	PTO Shaft - 10” MDSA Side Drive